Rubber grommet, PDE..M type

FEATURES & BENEFITS

- flexible cable grommets, high degree of tightness, IP 67
- fast installation
- for wide range of cable diameters
- various colours available

Cable gland for fast installation

MECHANICAL DATA

Material	EPDM
Halogen-free	yes
Operating temperature [°C]	-40 ÷ +110

CERTIFICATES & STANDARDS

IP rating	IP67
Flammability class	UL 94 HB
Standards	EN 60529

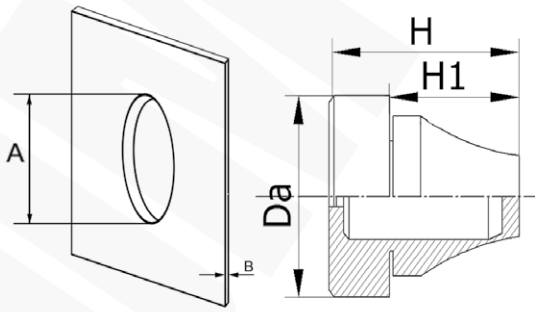

Type	Index Ergom	A	B	Da	H	H1	Colour	Cable external diameter [mm]	Quantity in package [pcs]
PDE 12M WT (50 PCS)	E03DK-05010213101	12,5	0,5÷2	20,0	12,8	5,6	white	4÷7	50
PDE 16M WT (50 PCS)	E03DK-05010213201	16,5	1÷4	21,0	17,7	11,0	white	5÷9	50
PDE 20M WT (50 PCS)	E03DK-05010213301	20,5	1÷4	25,5	20,0	13,4	white	8÷13	50
PDE 25M WT (50 PCS)	E03DK-05010213401	25,5	1÷4	30,5	21,3	15,3	white	11÷17	50
PDE 32M WT (25 PCS)	E03DK-05010213501	32,5	1÷4	38,5	24,6	18,6	white	15÷20	25
PDE 40M WT (25 PCS)	E03DK-05010213601	40,5	1÷4	48,5	29,5	21,7	white	19÷28	25
PDE 50M WT (10 PCS)	E03DK-05010213701	50,5	1÷4	60,5	34,8	25,5	white	27÷35	10
PDE 63M WT (5 PCS)	E03DK-05010213801	63,5	1÷4	73,5	40,0	28,9	white	34÷45	5
PDE 12M BK (50 PCS)	E03DK-05010211101	12,5	0,5÷2	20,0	12,8	5,6	black (RAL 9005)	4÷7	50
PDE 16M BK (50 PCS)	E03DK-05010211201	16,5	1÷4	21,0	17,7	11,0	black (RAL 9005)	5÷9	50
PDE 20M BK (50 PCS)	E03DK-05010211301	20,5	1÷4	25,5	20,0	13,4	black (RAL 9005)	8÷13	50
PDE 25M BK (50 PCS)	E03DK-05010211401	25,5	1÷4	30,5	21,3	15,3	black (RAL 9005)	11÷17	50
PDE 32M BK (25 PCS)	E03DK-05010211501	32,5	1÷4	38,5	24,6	18,6	black (RAL 9005)	15÷20	25
PDE 40M BK (25 PCS)	E03DK-05010211601	40,5	1÷4	48,5	29,5	21,7	black (RAL 9005)	19÷28	25
PDE 50M BK (10 PCS)	E03DK-05010211701	50,5	1÷4	60,5	34,8	25,5	black (RAL 9005)	27÷35	10
PDE 63M BK (5 PCS)	E03DK-05010211801	63,5	1÷4	73,5	40,0	28,9	black (RAL 9005)	34÷45	5

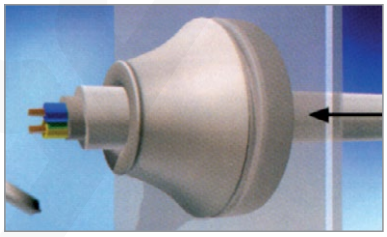

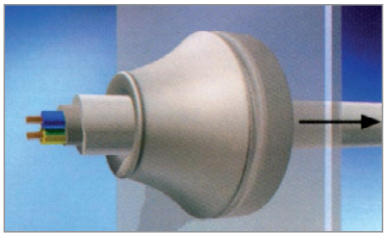

Date of publication: 4/1/2024

Graphic project, pictures and all technical data and descriptions in this catalogue are protected by Polish and international copyright laws. Names and logos used in the content of this catalogue may be trademarks, for which ZAE Ergom Sp. z o.o. has exclusive protection rights. ZAE ERGOM reserves the right for changes in the assortment and parameters of its products.